THE INFORMATION CONTAINED IN THIS DRAWING IS THE SOLE PROPERTY OF MBARI ANY REPRODUCTION IN PART OR WHOLE WITHOUT THE WRITTEN PERMISSION OF MBARI IS PROHIBITED.

REVISIONS			
REV.	DESCRIPTION	DATE	APPROVED
	INITIAL RELEASE		

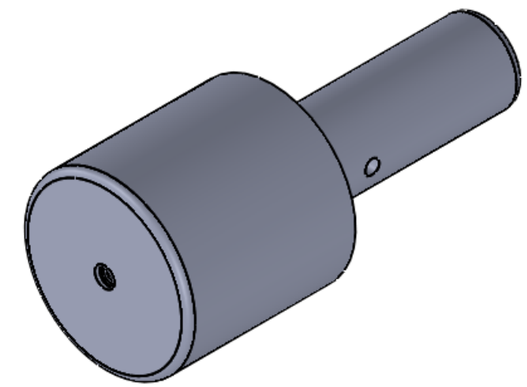

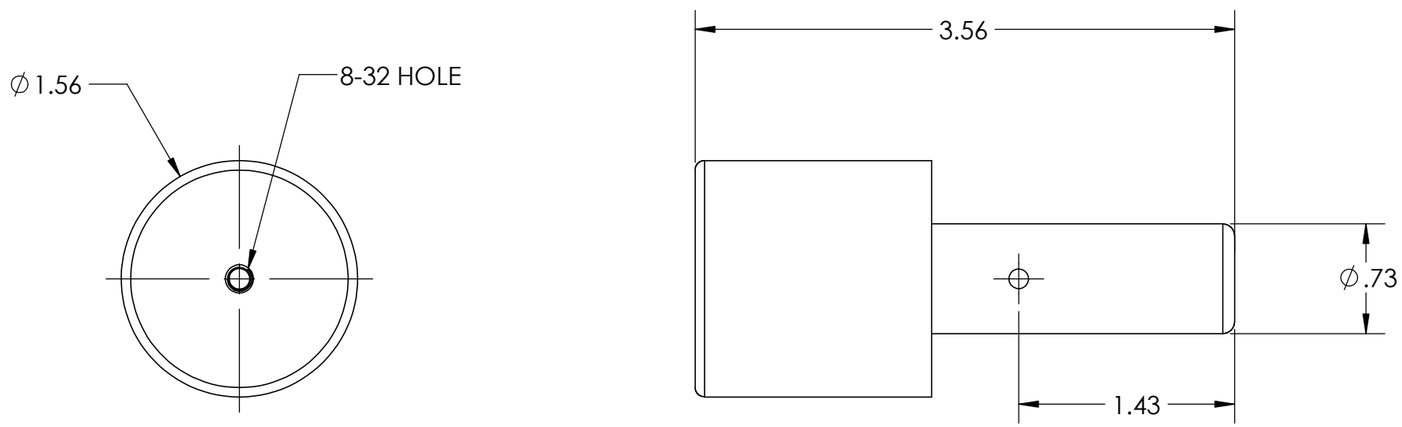

BILL OF MATERIALS

Shop / Q.C.	
Inspector	
Shop Foreman	
Engineer	
NEXT ASSY Description	NEXT ASSY Number
Application	

UNLESS OTHERWISE SPECIFIED TOLERANCES ARE:

1 PLACE DIM ±1/16	2 PLACE DIM ±.02	3 PLACE DIM ±.005	ANGLES ±1°

1. DIMENSIONS ARE IN INCHES
2. DIMENSION LIMITS HELD AFTER PLATING.
3. REMOVE BURRS AND SHARP EDGES .015 MAX.
4. MACHINED FILLET RADII .0150-.030.
5. MACHINED DIAMETERS ON A COMMON CENTERLINE CONCENTRIC WITHIN .OO5
6. PERPENDICULARITY & PARALLELISM OF MACHINED SURFACES .002 PER INCH. MAX .012 INCHES FOR SINGLE SURFACE.

DO NOT SCALE DRAWING

APPROVALS		DATE
DRAWN	NAME	9/27/00
ENGINEER	NAME	9/27/00
CHECKED		
PROJECT NO.	XXX	
PROJECT	ZZZZZZZZ	
WEIGHT		

Monterey Bay Aquarium Research Institute
MBARI
7700 Sandholdt RD.
Moss Landing, CA 95039
PH: (831) 775-1700

piston

SIZE	DWG. NO.	REV.
B	100XXXDWG	

SCALE 1:1 | CAD FILE: MECH ENG ON TORNADO | SHEET 1 OF 1